RV1S 2.0 WHEEL SUPPORT ASSEMBLY V1.0

* ##-TO SPECIFY COLOR

SL-SILVER | CH-BLACK | AW-WHITE

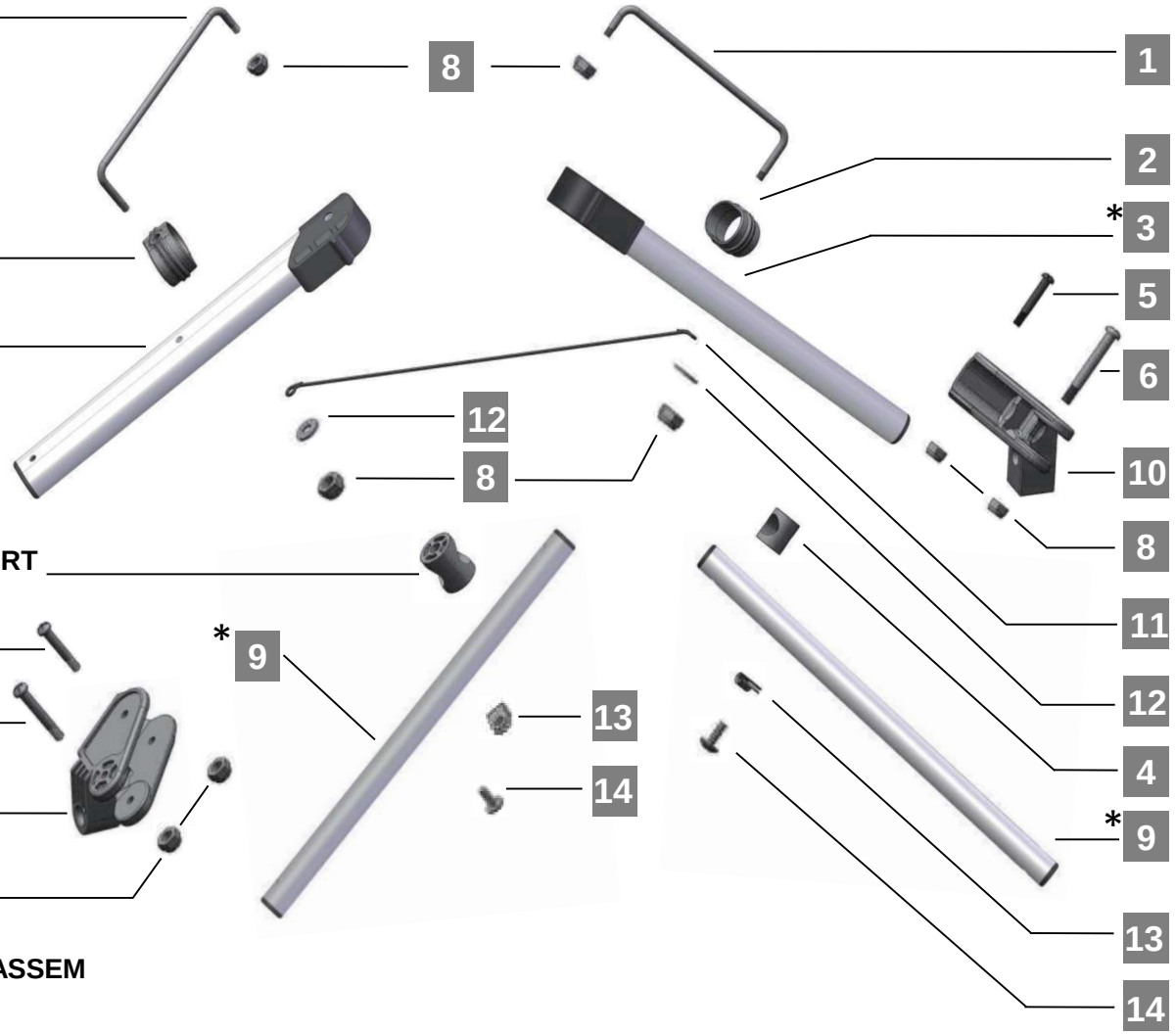

1 **WHEEL DRIVING RODS**
M1C - 19H - MF06XX

2 **STRUT ANCHOR**
P1C - 58H - XXPAXX

*3 **MAIN STRUT SET**
T1S - 06## - WSASSM

4 **SECOND STRUT TOP SUPPORT**
06 - P23 - C041 - 00

5 **M6X37 BOLT**
06 - M26 - M6X37PM

6 **M4X44 BOLT**
06 - M33 - M6X44PM

7 **STRUT PIVOT LEFT**
P1C - 39H - MFPAFG

8 **M6 NYLOCK NUT**
06 - M44 - M6X6NL

*9 **LOWER SECONDARY TUBE ASSEM**
T1S - 05## - WSASSM

10 **STRUT PIVOT RIGHT**
P1C - 37H - MFPAFG

11 **BINDING WIRE**
M1C - 23X - XX04XX

12 **M6 WASHER**
06 - M55 - M6WS

13 **PLASTIC CLIP**
P1S - 07BL - HCPA66

14 **ST4X10PT SCREW**
B1C - 29X - HCST04